BOARD-UP whiteboard 75x100 cm

Part of the Space-Up writing collection

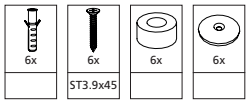

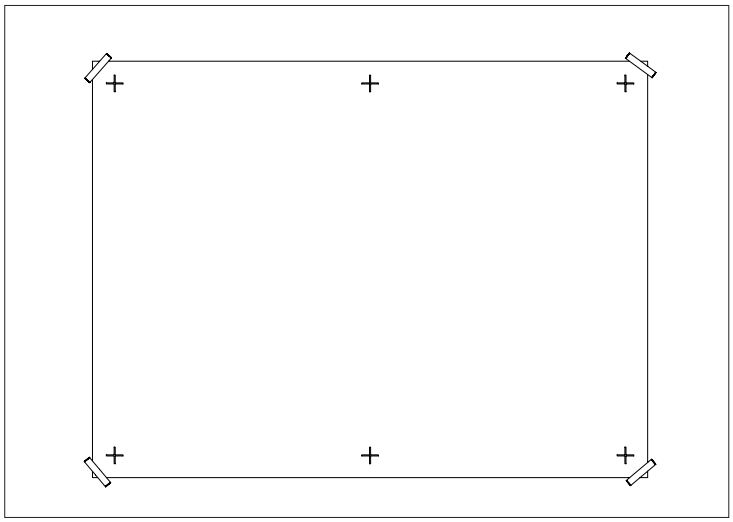

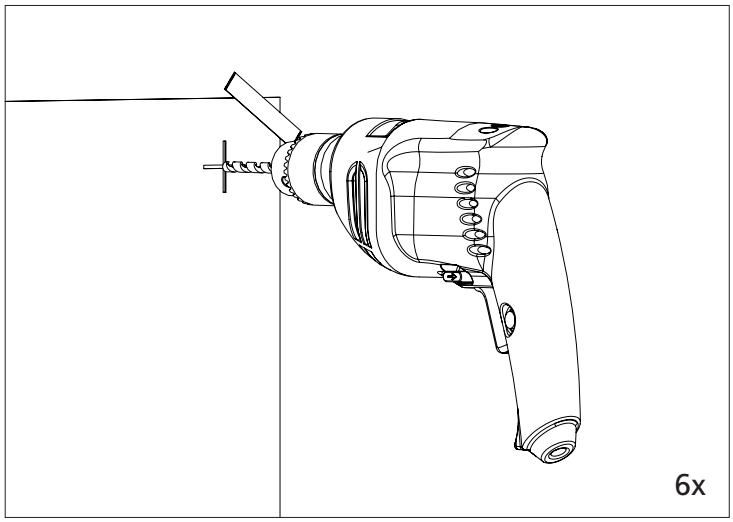

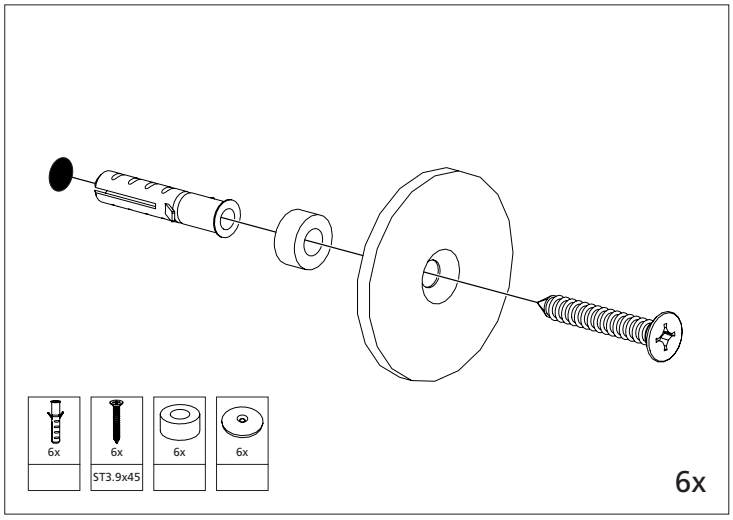

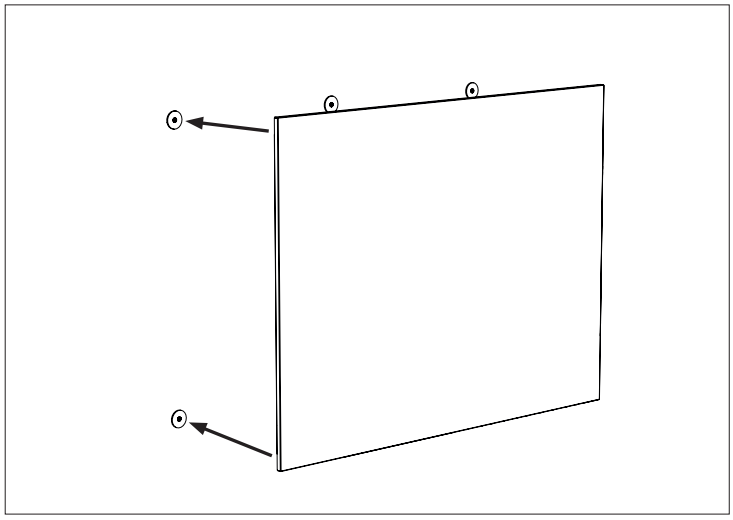

Legamaster International B.V.
Kwinkweerd 62
7241 CW Lochem - The Netherlands
www.legamaster.com

.egamaster, brand of the edding group.